90º ELBOWS
LONG RADIUS

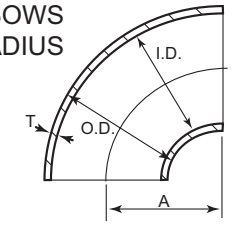

90º ELBOWS
LONG RADIUS

			SCHEDULE 5S		SCHEDULE 10S		SCHEDULE 40S		SCHEDULE 80S		
NOM. PIPE SIZE	OUTSIDE DIAMETER (O.D.)	CENTER TO FACE (O.D.)	INSIDE DIAMETER (I.D.)	WALL THICKNESS (T)	INSIDE DIAMETER (I.D.)	WALL THICKNESS (T)	INSIDE DIAMETER (I.D.)	WALL THICKNESS (T)	INSIDE DIAMETER (I.D.)	WALL THICKNESS (T)	NOM PIPE SIZE
1/2	.840	1-1/2	.710	.065	.674	.083	.622	.109	.546	.147	1/2
3/4	1.050	1-1/8	.920	.065	.884	.083	.824	.113	.742	.154	3/4
1	1.315	1-1/2	1.185	.065	1.097	.109	1.049	.133	.957	.179	1
1-1/4	1.660	1-7/8	1.530	.065	1.442	.109	1.380	.140	1.278	.191	1-1/4
1-1/2	1.900	2-1/4	1.770	.065	1.682	.109	1.610	.145	1.500	.200	1-1/2
2	2.375	3	2.245	.065	2.157	.109	2.067	.154	1.939	.218	2
2-1/2	2.875	3-3/4	2.709	.083	2.635	.120	2.469	.203	2.323	.276	2-1/2
3	3.500	4-1/2	3.334	.083	3.260	.120	3.068	.216	2.900	.300	3
3-1/2	4.000	5-1/4	3.834	.083	3.760	.120	3.548	.226	3.364	.318	3-1/2
4	4.500	6	4.334	.083	4.260	.120	4.026	.237	3.826	.337	4
5	5.563	7-1/2	5.345	.109	5.295	.134	5.047	.258	4.813	.375	5
6	6.625	9	6.407	.109	6.357	.134	6.065	.280	5.761	.432	6
8	8.625	12	8.407	.109	8.329	.148	7.981	.322	7.625	.500	8
10	10.750	15	10.482	.134	10.420	.165	10.020	.365	9.750	.500	10
12	12.750	18	12.438	.156	12.390	.180	12.000	.375	11.750	.500	12

45º ELBOWS
LONG RADIUS

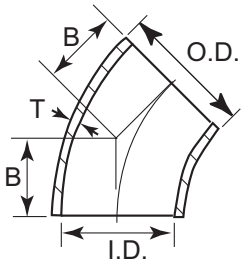

45º ELBOWS
LONG RADIUS

			SCHEDULE 5S		SCHEDULE 10S		SCHEDULE 40S		SCHEDULE 80S		
NOM. PIPE SIZE	OUTSIDE DIAMETER (O.D.)	CENTER TO FACE (B)	INSIDE DIAMETER (I.D.)	WALL THICKNESS (T)	INSIDE DIAMETER (I.D.)	WALL THICKNESS (T)	INSIDE DIAMETER (I.D.)	WALL THICKNESS (T)	INSIDE DIAMETER (I.D.)	WALL THICKNESS (T)	NOM PIPE SIZE
1/2	.840	5/8	.710	.065	.674	.083	.622	.109	.546	.147	1/2
3/4	1.050	7/16	.920	.065	.884	.083	.824	.113	.742	.154	3/4
1	1.315	7/8	1.185	.065	1.097	.109	1.049	.133	.957	.179	1
1-1/4	1.660	1	1.530	.065	1.442	.109	1.380	.140	1.278	.191	1-1/4
1-1/2	1.900	1-1/8	1.770	.065	1.682	.109	1.610	.145	1.500	.200	1-1/2
2	2.375	1-3/8	2.245	.065	2.157	.109	2.067	.154	1.939	.218	2
2-1/2	2.875	1-3/4	2.709	.083	2.635	.120	2.469	.203	2.323	.276	2-1/2
3	3.500	2	3.334	.083	3.260	.120	3.068	.216	2.900	.300	3
3-1/2	4.000	2-1/4	3.834	.083	3.760	.120	3.548	.226	3.364	.318	3-1/2
4	4.500	2-1/2	4.334	.083	4.260	.120	4.026	.237	3.826	.337	4
5	5.563	3-1/8	5.345	.109	5.295	.134	5.047	.258	4.813	.375	5
6	6.625	3-3/4	6.407	.109	6.357	.134	6.065	.280	5.761	.432	6
8	8.625	5	8.407	.109	8.329	.148	7.981	.322	7.625	.500	8
10	10.750	6-1/4	10.482	.134	10.420	.165	10.020	.365	9.750	.500	10
12	12.750	7-1/2	12.438	.156	12.390	.180	12.000	.375	11.750	.500	12

STRAIGHT TEES

STRAIGHT TEES

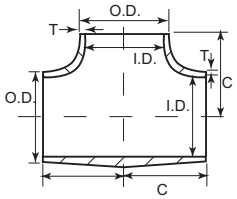

			SCHEDULE 5S		SCHEDULE 10S		SCHEDULE 40S		SCHEDULE 80S		
NOM. PIPE SIZE	OUTSIDE DIAMETER (O.D.)	CENTER TO END (C)	INSIDE DIAMETER (I.D.)	WALL THICKNESS (T)	INSIDE DIAMETER (I.D.)	WALL THICKNESS (T)	INSIDE DIAMETER (I.D.)	WALL THICKNESS (T)	INSIDE DIAMETER (I.D.)	WALL THICKNESS (T)	NOM PIPE SIZE
1/2	.840	1	.710	.065	.674	.083	.622	.109	.546	.147	1/2
3/4	1.050	1-1/8	.920	.065	.884	.083	.824	.113	.742	.154	3/4
1	1.315	1-1/2	1.185	.065	1.097	.109	1.049	.133	.957	.179	1
1-1/4	1.660	1-7/8	1.530	.065	1.442	.109	1.380	.140	1.278	.191	1-1/4
1-1/2	1.900	2-1/4	1.770	.065	1.682	.109	1.610	.145	1.500	.200	1-1/2
2	2.375	2-1/2	2.245	.065	2.157	.109	2.067	.154	1.939	.218	2
2-1/2	2.875	3	2.709	.083	2.635	.120	2.469	.203	2.323	.276	2-1/2
3	3.500	3-3/8	3.334	.083	3.260	.120	3.068	.216	2.900	.300	3
3-1/2	4.000	3-3/4	3.834	.083	3.760	.120	3.548	.226	3.364	.318	3-1/2
4	4.500	4-1/8	4.334	.083	4.260	.120	4.026	.237	3.826	.337	4
5	5.563	4-7/8	5.345	.109	5.295	.134	5.047	.258	4.813	.375	5
6	6.625	5-5/8	6.407	.109	6.357	.134	6.065	.280	5.761	.432	6
8	8.625	7	8.407	.109	8.329	.148	7.981	.322	7.625	.500	8
10	10.750	8-1/2	10.482	.134	10.420	.165	10.020	.365	9.750	.500	10
12	12.750	10	12.438	.156	12.390	.180	12.000	.375	11.750	.500	12

CAPS

CAPS

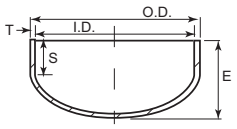

NOM. PIPE SIZE	OUTSIDE DIAMETER (O.D.)	LENGTH (E) TANGENT LENGTH (S)	SCHEDULE 5S		SCHEDULE 10S		SCHEDULE 40S		SCHEDULE 80S		NOM. PIPE SIZE
			INSIDE DIAMETER (I.D.)	WALL THICKNESS (T)	INSIDE DIAMETER (I.D.)	WALL THICKNESS (T)	INSIDE DIAMETER (I.D.)	WALL THICKNESS (T)	INSIDE DIAMETER (I.D.)	WALL THICKNESS (T)	
1/2	.840	E 1 S .74	.710	.065	.674	.083	.622	.109	.546	.147	1/2
3/4	1.050	E 1 S .68	.920	.065	.884	.083	.824	.113	.742	.154	3/4
1	1.315	E 1-1/2 S 1.10	1.185	.065	1.097	.109	1.049	.133	.957	.179	1
1-1/4	1.660	E 1-1/2 S 1.02	1.530	.065	1.442	.109	1.380	.140	1.278	.191	1-1/4
1-1/2	1.900	E 1-1/2 S .95	1.770	.065	1.682	.109	1.610	.145	1.500	.200	1-1/2
2	2.375	E 1-1/2 S .83	2.245	.065	2.157	.109	2.067	.154	1.939	.218	2
2-1/2	2.875	E 1-1/2 S .68	2.709	.083	2.635	.120	2.469	.203	2.323	.276	2-1/2
3	3.500	E 2 S 1.02	3.334	.083	3.260	.120	3.068	.216	2.900	.300	3
3-1/2	4.000	E 2-1/2 S 1.40	3.834	.083	3.760	.120	3.548	.226	3.364	.318	3-1/2
4	4.500	E 2-1/2 S 1.26	4.334	.083	4.260	.120	4.026	.237	3.826	.337	4
5	5.563	E 3 S 1.48	5.345	.109	5.295	.134	5.047	.258	4.813	.375	5
6	6.625	E 3-1/2 S 1.70	6.407	.109	6.357	.134	6.065	.280	5.761	.432	6
8	8.625	E 4 S 1.68	8.407	.109	8.329	.148	7.981	.322	7.625	.500	8
10	10.750	E 5 S 2.13	10.482	.134	10.420	.165	10.020	.365	9.750	.500	10
12	12.750	E 6 S 2.63	12.438	.156	12.390	.180	12.000	.375	11.750	.500	12

90º ELBOWS
SHORT RADIUS

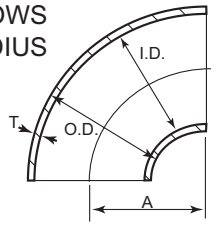

90º ELBOWS

SHORT RADIUS

			SCHEDULE 5S		SCHEDULE 10S		SCHEDULE 40S		SCHEDULE 80S		
NOM. PIPE SIZE	OUTSIDE DIAMETER (O.D.)	CENTER TO FACE (A)	INSIDE DIAMETER (I.D.)	WALL THICKNESS (T)	INSIDE DIAMETER (I.D.)	WALL THICKNESS (T)	INSIDE DIAMETER (I.D.)	WALL THICKNESS (T)	INSIDE DIAMETER (I.D.)	WALL THICKNESS (T)	NOM PIPE SIZE
1	1.315	1	1.185	.065	1.097	.109	1.049	.133	.957	.179	1
1-1/4	1.660	1-1/4	1.530	.065	1.442	.109	1.380	.140	1.278	.191	1-1/4
1-1/2	1.900	1-1/2	1.770	.065	1.682	.109	1.610	.145	1.500	.200	1-1/2
2	2.375	2	2.245	.065	2.157	.109	2.067	.154	1.939	.218	2
2-1/2	2.875	2-1/2	2.709	.083	2.635	.120	2.469	.203	2.323	.276	2-1/2
3	3.500	3	3.334	.083	3.260	.120	3.068	.216	2.900	.300	3
3-1/2	4.000	3-1/2	3.834	.083	3.760	.120	3.548	.226	3.364	.318	3-1/2
4	4.500	4	4.334	.083	4.260	.120	4.026	.237	3.826	.337	4
5	5.563	5	5.345	.109	5.295	.134	5.047	.258	4.813	.375	5
6	6.625	6	6.407	.109	6.357	.134	6.065	.280	5.761	.432	6
8	8.625	8	8.407	.109	8.329	.148	7.981	.322	7.625	.500	8
10	10.750	10	10.482	.134	10.420	.165	10.020	.365	9.750	.500	10
12	12.750	12	12.438	.156	12.390	.180	12.000	.375	11.750	.500	12

180º RETURN BENDS
LONG RADIUS

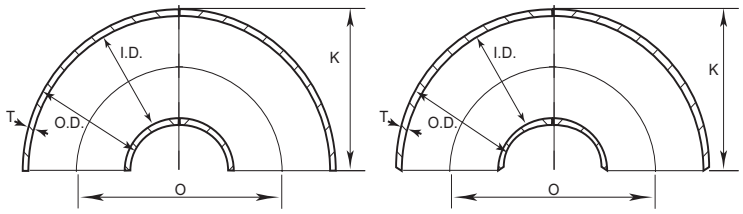

180º RETURN BENDS

LONG RADIUS

				SCHEDULE 5S		SCHEDULE 10S		SCHEDULE 40S		SCHEDULE 80S		
NOM. PIPE SIZE	OUTSIDE DIAMETER (O.D.)	CENTER TO CENTER (O)	BACK TO FACE (K)	INSIDE DIAMETER (I.D.)	WALL THICKNESS (T)	INSIDE DIAMETER (I.D.)	WALL THICKNESS (T)	INSIDE DIAMETER (I.D.)	WALL THICKNESS (T)	INSIDE DIAMETER (I.D.)	WALL THICKNESS (T)	NOM PIPE SIZE
1/2	.840	3	17/8	.710	.065	.674	.083	.622	.109	.546	.147	1/2
3/4	1.050	2-1/4	1-11/16	.920	.065	.884	.083	.824	.113	.742	.154	3/4
1	1.315	3	2-3/16	1.185	.065	1.097	.109	1.049	.133	.957	.179	1
1-1/4	1.660	3-3/4	2-3/4	1.530	.065	1.442	.109	1.380	.140	1.278	.191	1-1/4
1-1/2	1.900	4-1/2	3-1/4	1.770	.065	1.682	.109	1.610	.145	1.500	.200	1-1/2
2	2.375	6	4-3/16	2.245	.065	2.157	.109	2.067	.154	1.939	.218	2
2-1/2	2.875	7-1/2	5-3/16	2.709	.083	2.635	.120	2.469	.203	2.323	.276	2-1/2
3	3.500	9	6-1/4	3.334	.083	3.260	.120	3.068	.216	2.900	.300	3
3-1/2	4.000	10-1/2	7-1/4	3.834	.083	3.760	.120	3.548	.226	3.364	.318	3-1/2
4	4.500	12	8-1/4	4.334	.083	4.260	.120	4.026	.237	3.826	.337	4
5	5.563	15	10-5/16	5.345	.109	5.295	.134	5.047	.258	4.813	.375	5
6	6.625	18	12-5/16	6.407	.109	6.357	.134	6.065	.280	5.761	.432	6
8	8.625	24	1-5/16	8.407	.109	8.329	.148	7.981	.322	7.625	.500	8
10	10.750	30	20-3/8	10.482	.134	10.420	.165	10.020	.365	9.750	.500	10
12	12.750	36	24-3/8	12.438	.156	12.390	.180	12.000	.375	11.750	.500	12

STRAIGHT CROSSES

STRAIGHT CROSSES

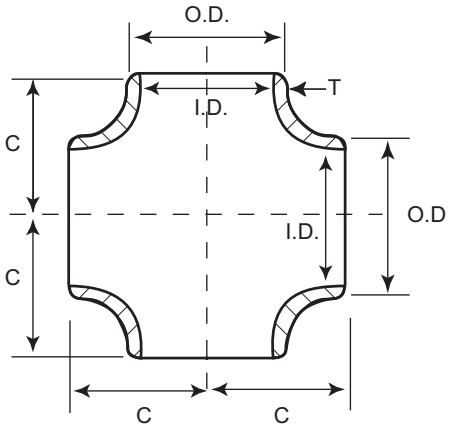

			SCHEDULE 5S		SCHEDULE 10S		SCHEDULE 40S		SCHEDULE 80S		
NOM. PIPE SIZE	OUTSIDE DIAMETER (O.D.)	CENTER TO END (B)	INSIDE DIAMETER (I.D.)	WALL THICKNESS (T)	INSIDE DIAMETER (I.D.)	WALL THICKNESS (T)	INSIDE DIAMETER (I.D.)	WALL THICKNESS (T)	INSIDE DIAMETER (I.D.)	WALL THICKNESS (T)	NOM. PIPE SIZE
1	1.315	1-1/2	1.185	.065	1.097	.109	1.049	.133	.957	.179	1
1-1/4	1.660	1-7/8	1.530	.065	1.442	.109	1.380	.140	1.278	.191	1-1/4
1-1/2	1.900	2-1/4	1.770	.065	1.682	.109	1.610	.145	1.500	.200	1-1/2
2	2.375	2-1/2	2.245	.065	2.157	.109	2.067	.154	1.939	.218	2
2-1/2	2.875	3	2.709	.083	2.635	.120	2.469	.203	2.323	.276	2-1/2
3	3.500	3-3/8	3.334	.083	3.260	.120	3.068	.216	2.900	.300	3
3-1/2	4.000	3-3/4	3.834	.083	3.760	.120	3.548	.226	3.364	.318	3-1/2
4	4.500	4-1/8	4.334	.083	4.260	.120	4.026	.237	3.826	.337	4
5	5.563	4-7/8	5.345	.109	5.295	.134	5.047	.258	4.813	.375	5
6	6.625	5-5/8	6.407	.109	6.357	.134	6.065	.280	5.761	.432	6
8	8.625	7	8.407	.109	8.329	.148	7.981	.322	7.625	.500	8
10	10.750	8-1/2	10.482	.134	10.420	.165	10.020	.365	9.750	.500	10
12	12.750	10	12.438	.156	12.390	.180	12.000	.375	11.750	.500	12

STUB ENDS

STUB ENDS

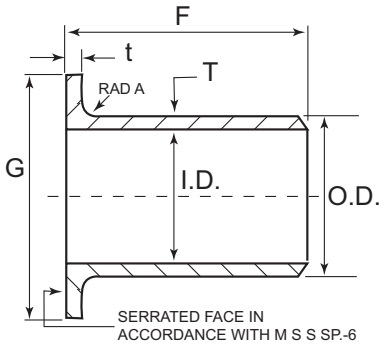

ASA TYPE A

STUB ENDS

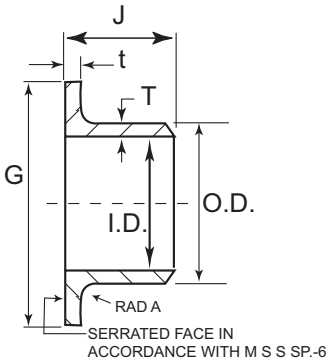

MSS TYPE A

STUB ENDS

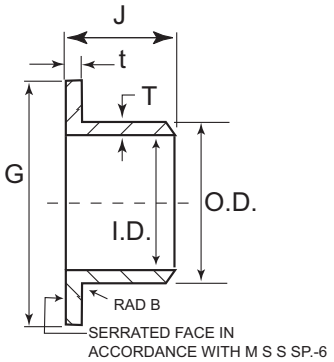

MSS TYPE B

				RADIUS		SCHEDULE 5S			SCHEDULE 10S			
NOM. PIPE SIZE	OUTSIDE DIAMETER (O.D.)	DIAMETER (G)	LENGTH (F) SHORT	A	B	INSIDE DIAMETER (I.D.)	WALL THICKNESS (T)	LAP THICKNESS (t)	INSIDE DIAMETER (I.D.)	WALL THICKNESS (T)	LAP THICKNESS (t)	NOM. PIPE SIZE
1/2	.840	1-3/8	2	1/8	1/32	.710	.065	.084	.674	.083	.095	1/2
3/4	1.050	1-11/16	2	1/8	1/32	.920	.065	.086	.884	.083	.097	3/4
1	1.315	2	2	1/8	1/32	1.185	.065	.093	1.097	.109	.120	1
1-1/4	1.660	2-1/2	2	3/16	1/32	1.530	.065	.095	1.442	.109	.124	1-1/4
1-1/2	1.900	2-7/8	2	1/4	1/32	1.770	.065	.097	1.682	.109	.126	1-1/2
2	2.375	3-5/8	2-1/2	5/16	1/32	2.245	.065	.100	2.157	.109	.130	2
2-1/2	2.875	4-1/8	2-1/2	5/16	1/32	2.709	.083	.130	2.635	.120	.156	2-1/2
3	3.500	5	2-1/2	3/8	1/32	3.334	.083	.134	3.260	.120	.161	3
3-1/2	4.000	5-1/2	3	3/8	1/32	3.834	.083	.167	3.760	.120	.165	3-1/2
4	4.500	6-3/16	3	7/16	1/32	4.334	.083	.140	4.260	.120	.169	4
5	5.563	7-5/16	3	7/16	1/16	5.345	.109	.168	5.295	.134	.186	5
6	6.625	8-1/2	3-1/2	1/2	1/16	6.407	.109	.175	6.357	.134	.194	6
8	8.625	10-5/8	4	1/2	1/16	8.407	.109	.187	8.329	.148	.218	8
10	10.750	12-3/4	5	1/2	1/16	10.482	.134	.221	10.420	.165	.245	10
12	12.750	15	6	1/2	1/16	12.438	.156	.249	12.390	.180	.260	12

			LENGTH (F)		RADIUS		SCHEDULE 40S			SCHEDULE 80S				
NOM. PIPE SIZE	OUTSIDE DIAMETER (O.D.)	DIAMETER (G)	LONG	SHORT	A	B	INSIDE DIAMETER (I.D.)	WALL THICKNESS (T)	LAP THICKNESS (t)	INSIDE DIAMETER (I.D.)	WALL THICKNESS (T)	LAP THICKNESS (t)	LENGTH (F) LONG	NOM. PIPE SIZE
1/2	.840	1-3/8	3	2	1/8	1/32	.622	.109	.109	.546	.147	.147	3	1/2
3/4	1.050	1-11/16	3	2	1/8	1/32	.824	.113	.113	.742	.154	.154	3	3/4
1	1.315	2	4	2	1/8	1/32	1.049	.133	.133	.957	.179	.179	4	1
1-1/4	1.660	2-1/2	4	2	3/16	1/32	1.380	.140	.140	1.278	.191	.191	4	1-1/4
1-1/2	1.900	2-7/8	4	2	1/4	1/32	1.610	.145	.145	1.500	.200	.200	4	1-1/2
2	2.375	3-5/8	6	2-1/2	5/16	1/32	2.067	.154	.154	1.939	.218	.218	6	2
2-1/2	2.875	4-1/8	6	2-1/2	5/16	1/32	2.469	.203	.203	2.323	.276	.276	6	2-1/2
3	3.500	5	6	2-1/2	3/8	1/32	3.068	.216	.216	2.900	.300	.300	6	3
3-1/2	4.000	5-1/2	6	3	3/8	1/32	3.548	.226	.226	3.364	.318	.318	6	3-1/2
4	4.500	6-3/16	6	3	7/16	1/32	4.026	.237	.237	3.826	.337	.337	6	4
5	5.563	7-5/16	8	3	7/16	1/16	5.047	.258	.258	4.813	.375	.375	8	5
6	6.625	8-1/2	8	3-1/2	1/2	1/16	6.065	.280	.280	5.761	.432	.432	8	6
8	8.625	10-5/8	8	4	1/2	1/16	7.981	.322	.322	7.625	.500	.500	8	8
10	10.750	12-3/4	10	5	1/2	1/16	10.020	.365	.365	9.750	.500	.500	10	10
12	12.750	15	10	6	1/2	1/16	12.000	.375	.375	11.750	.500	.500	10	12

STUB ENDS

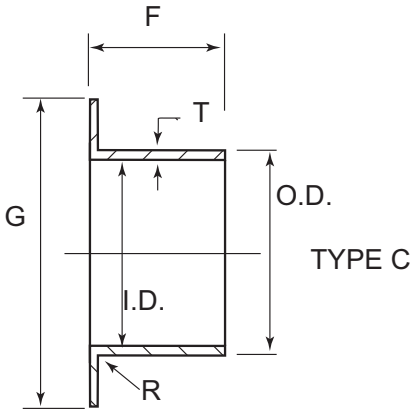

					SCHEDULE 5S		SCHEDULE 10S		
NOM. PIPE SIZE	OUTSIDE DIAMETER (O.D.)	DIAMETER (G)	LENGTH (F)	RADIUS (R)	INSIDE DIAMETER (I.D.)	WALL THICKNESS (T)	INSIDE DIAMETER (I.D.)	WALL THICKNESS (T)	NOM. PIPE SIZE
1/2	.840	1-3/8	2	1/32	.710	.065	.674	.083	1/2
3/4	1.050	1-11/16	2	1/32	.920	.065	.884	.083	3/4
1	1.315	2	2	1/32	1.185	.065	1.097	.109	1
1-1/4	1.660	2-1/2	2	1/32	1.530	.065	1.442	.109	1-1/4
1-1/2	1.900	2-7/8	2	1/32	1.770	.065	1.682	.109	1-1/2
2	2.375	3-5/8	2-1/2	1/32	2.245	.065	2.157	.109	2
2-1/2	2.875	4-1/8	2-1/2	1/32	2.709	.083	2.635	.120	2-1/2
3	3.500	5	2-1/2	1/32	3.334	.083	3.260	.120	3
4	4.500	6-3/16	3	1/32	4.334	.083	4.260	.120	4
5	5.563	7-5/16	3	1/16	5.345	.109	5.295	.134	5
6	6.625	8-1/2	3-1/2	1/16	6.407	.109	6.357	.134	6
8	8.625	10-5/8	4	1/16	8.407	.109	8.329	.148	8
10	10.750	12-3/4	5	1/16	10.482	.134	10.420	.165	10
12	12.750	15	6	1/16	12.438	.156	12.390	.180	12

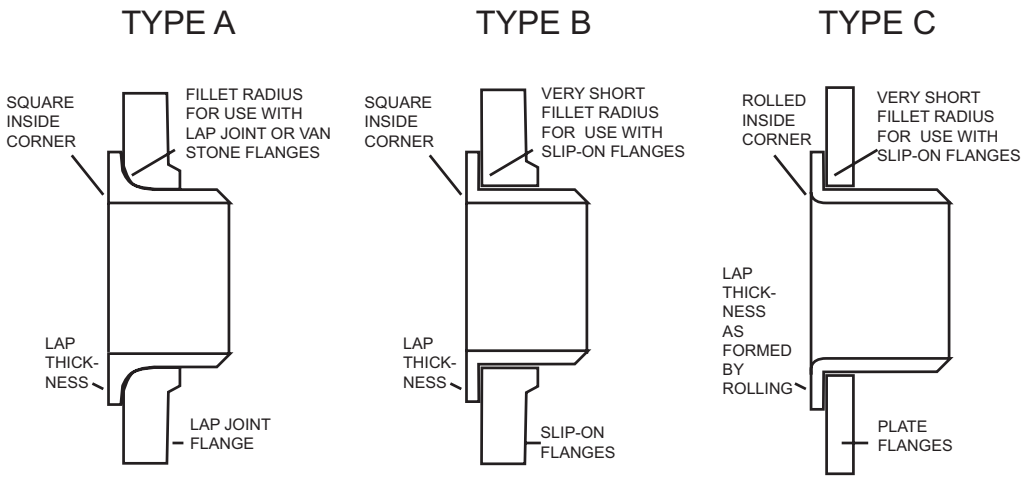

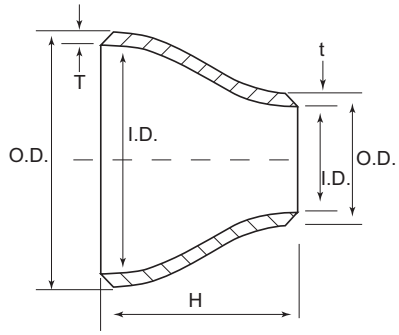

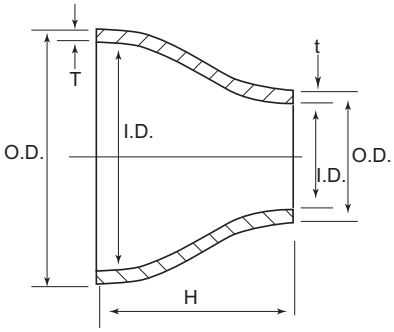

CONCENTRIC REDUCERS

NOM. PIPE SIZE	OUTSIDE DIAMETER		LENGTH (H)	SCHEDULE 5S		SCHEDULE 10S		SCHEDULE 40S		SCHEDULE 80S		NOM PIPE SIZE
	LARGE END (O.D.)	SMALL END (O.D.)		INSIDE DIAMETER (I.D.) LARGE END –LE SMALL END–SE	WALL THICKNESS LARGE END –T SMALL END–t	INSIDE DIAMETER (I.D.) LARGE END –LE SMALL END–SE	WALL THICKNESS LARGE END –T SMALL END–t	INSIDE DIAMETER (I.D.) LARGE END –LE SMALL END–SE	WALL THICKNESS LARGE END –T SMALL END–t	INSIDE DIAMETER (I.D.) LARGE END –LE SMALL END–SE	WALL THICKNESS LARGE END –T SMALL END–t	
3/4 x 3/8	1.050	.675	1-1/2	LE .920 SE .545	T .065 t .065	LE .884 SE .545	T .083 t .065	LE .824 SE .493	T .113 t .091	LE .742 SE .423	T .154 t .126	3/4 x 3/8
3/4 x 1/2	1.050	.840	1-1/2	LE .920 SE .710	T .065 t .065	LE .884 SE .674	T .083 t .083	LE .824 SE .622	T .113 t .109	LE .742 SE .546	T .154 t .147	3/4 x 1/2
1 x 3/8	1.315	.675	2	LE 1.185 SE .545	T .065 t .065	LE 1.097 SE .545	T .109 t .065	LE 1.049 SE .493	T .133 t .091	LE .957 SE .423	T .179 t .126	1 x 3/8
1 x 1/2	1.315	.840	2	LE 1.185 SE .710	T .065 t .065	LE 1.097 SE .674	T .109 t .083	LE 1.049 SE .622	T .133 t .109	LE .957 SE .546	T .179 t .147	1 x 1/2
1 x 3/4	1.315	1.050	2	LE 1.185 SE .920	T .065 t .065	LE 1.097 SE .884	T .109 t .083	LE 1.049 SE .824	T .133 t .113	LE .957 SE .742	T .179 t .154	1 x 3/4
1-1/4 x 1/2	1.660	.840	2	LE 1.530 SE .710	T .065 t .065	LE 1.442 SE .674	T .109 t .083	LE 1.380 SE .622	T .140 t .109	LE 1.278 SE .546	T .191 t .147	1-1/4 x 1/2
1-1/4 x 3/4	1.660	1.050	2	LE 1.530 SE .920	T .065 t .065	LE 1.442 SE .884	T .109 t .083	LE 1.380 SE .824	T .140 t .113	LE 1.278 SE .742	T .191 t .154	1-1/4 x 3/4
1-1/4 x 1	1.660	1.315	2	LE 1.530 SE 1.185	T .065 t .065	LE 1.442 SE 1.097	T .109 t .109	LE 1.380 SE 1.049	T .140 t .133	LE 1.278 SE .957	T .191 t .179	1-1/4 x 1
1-1/2 x 1/2	1.900	.840	2-1/2	LE 1.770 SE .710	T .065 t .065	LE 1.682 SE .674	T .109 t .083	LE 1.610 SE .622	T .145 t .109	LE 1.500 SE .546	T .200 t .147	1-1/2 x 1/2
1-1/2 x 3/4	1.900	1.050	2-1/2	LE 1.770 SE .920	T .065 t .065	LE 1.682 SE .884	T .109 t .083	LE 1.610 SE .824	T .145 t .113	LE 1.500 SE .742	T .200 t .154	1-1/2 x 3/4
1-1/2 x 1	1.900	1.315	2-1/2	LE 1.770 SE 1.185	T .065 t .065	LE 1.682 SE 1.097	T .109 t .109	LE 1.610 SE 1.049	T .145 t .133	LE 1.500 SE .957	T .200 t .179	1-1/2 x 1
1-1/2 x 1-1/4	1.900	1.660	2-1/2	LE 1.770 SE 1.530	T .065 t .065	LE 1.682 SE 1.442	T .109 t .109	LE 1.610 SE 1.380	T .145 t .140	LE 1.500 SE 1.278	T .200 t .191	1-1/2 x 1-1/4
2 x 3/4	2.375	1.050	3	LE 2.245 SE .920	T .065 t .065	LE 2.157 SE .884	T .109 t .083	LE 2.067 SE .824	T .154 t .113	LE 1.939 SE .742	T .218 t .154	2 x 3/4
2 x 1	2.375	1.315	3	LE 2.245 SE 1.185	T .065 t .065	LE 2.157 SE 1.097	T .109 t .109	LE 2.067 SE 1.049	T .154 t .133	LE 1.939 SE .957	T .218 t .179	2 x 1
2 x 1-1/4	2.375	1.660	3	LE 2.245 SE 1.530	T .065 t .065	LE 2.157 SE 1.442	T .109 t .109	LE 2.067 SE 1.380	T .154 t .140	LE 1.939 SE 1.278	T .218 t .191	2 x 1-1/4
2 x 1-1/2	2.375	1.900	3	LE 2.245 SE 1.770	T .065 t .065	LE 2.157 SE 1.682	T .109 t .109	LE 2.067 SE 1.610	T .154 t .145	LE 1.939 SE 1.500	T .218 t .200	2 x 1-1/2
2-1/2 x 1	2.875	1.315	3-1/2	LE 2.709 SE 1.185	T .083 t .065	LE 2.635 SE 1.097	T .120 t .109	LE 2.469 SE 1.049	T .203 t .133	LE 2.323 SE .957	T .276 t .179	2-1/2 x 1
2-1/2 x 1-1/4	2.875	1.660	3-1/2	LE 2.709 SE 1.530	T .083 t .065	LE 2.635 SE 1.442	T .120 t .109	LE 2.469 SE 1.380	T .203 t .140	LE 2.323 SE 1.278	T .276 t .191	2-1/2 x 1-1/4
2-1/2 x 1-1/2	2.875	1.900	3-1/2	LE 2.709 SE 1.770	T .083 t .065	LE 2.635 SE 1.682	T .120 t .109	LE 2.469 SE 1.610	T .203 t .145	LE 2.323 SE 1.500	T .276 t .200	2-1/2 x 1-1/2
2-1/2 x 2	2.875	2.375	3-1/2	LE 2.709 SE 2.245	T .083 t .065	LE 2.635 SE 2.157	T .120 t .109	LE 2.469 SE 2.067	T .203 t .154	LE 2.323 SE 1.939	T .276 t .218	2-1/2 x 2
3 x 1	3.500	1.315	3-1/2	LE 3.334 SE 1.185	T .083 t .065	LE 3.260 SE 1.097	T .120 t .109	LE 3.068 SE 1.049	T .216 t .133	LE 2.900 SE .957	T .300 t .179	3 x 1
3 x 1-1/4	3.500	1.660	3-1/2	LE 3.334 SE 1.530	T .083 t .065	LE 3.260 SE 1.442	T .120 t .109	LE 3.068 SE 1.380	T .216 t .140	LE 2.900 SE 1.278	T .300 t .191	3 x 1-1/4
3 x 1-1/2	3.500	1.900	3-1/2	LE 3.334 SE 1.770	T .083 t .065	LE 3.260 SE 1.682	T .120 t .109	LE 3.068 SE 1.610	T .216 t .145	LE 2.900 SE 1.500	T .300 t .200	3 x 1-1/2
3 x 2	3.5	2.375	3-1/2	LE 3.334 SE 2.245	T .083 t .065	LE 3.260 SE 2.157	T .120 t .109	LE 3.068 SE 2.067	T .216 t .154	LE 2.900 SE 1.939	T .300 t .218	3 x 2
3 x 2-1/2	3.5	2.875	3-1/2	LE 3.334 SE 2.709	T .083 t .083	LE 3.260 SE 2.635	T .120 t .120	LE 3.068 SE 2.469	T .216 t .203	LE 2.900 SE 2.323	T .300 t .276	3 x 2-1/2
3-1/2 x 1-1/4	4	1.66	4	LE 3.834 SE 1.530	T .083 t .065	LE 3.760 SE 1.442	T .120 t .109	LE 3.548 SE 1.380	T .226 t .140	LE 3.364 SE 1.278	T .318 t .191	3-1/2 x 1-1/4
3-1/2 x 1-1/2	4	1.9	4	LE 3.834 SE 1.770	T .083 t .065	LE 3.760 SE 1.682	T .120 t .109	LE 3.548 SE 1.610	T .226 t .145	LE 3.364 SE 1.500	T .318 t .200	3-1/2 x 1-1/2

CONCENTRIC REDUCERS (CONT.)

NOM. PIPE SIZE	OUTSIDE DIAMETER LARGE END (O.D.)	OUTSIDE DIAMETER SMALL END (O.D.)	LENGTH (H)	SCHEDULE 5S INSIDE DIAMETER (I.D.) LARGE END –LE SMALL END–SE	SCHEDULE 5S WALL THICKNESS LARGE END –T SMALL END–t	SCHEDULE 10S INSIDE DIAMETER (I.D.) LARGE END –LE SMALL END–SE	SCHEDULE 10S WALL THICKNESS LARGE END –T SMALL END–t	SCHEDULE 40S INSIDE DIAMETER (I.D.) LARGE END –LE SMALL END–SE	SCHEDULE 40S WALL THICKNESS LARGE END –T SMALL END–t	SCHEDULE 80S INSIDE DIAMETER (I.D.) LARGE END –LE SMALL END–SE	SCHEDULE 80S WALL THICKNESS LARGE END –T SMALL END–t	NOM PIPE SIZE
3-1/2 x 2	4.000	2.375	4	LE 3.834 SE 2.245	T .083 t .065	LE 3.760 SE 2.157	T .120 t .109	LE 3.548 SE 2.067	T .226 t .154	LE 3.364 SE 1.939	T .318 t .218	3-1/2 x 2
3-1/2 x 2-1/2	4.000	2.875	4	LE 3.834 SE 2.709	T .083 t .083	LE 3.760 SE 2.635	T .120 t .120	LE 3.548 SE 2.469	T .226 t .203	LE 3.364 SE 2.323	T .318 t .276	3-1/2 x 2-1/2
3-1/2 x 3	4.000	3.500	4	LE 3.834 SE 3.334	T .083 t .083	LE 3.760 SE 3.260	T .120 t .120	LE 3.548 SE 3.068	T .226 t .216	LE 3.364 SE 2.900	T .318 t .300	3-1/2 x 3
4 x 1-1/2	4.500	1.900	4	LE 4.334 SE 1.770	T .083 t .065	LE 4.260 SE 1.682	T .120 t .109	LE 4.026 SE 1.610	T .237 t .145	LE 3.826 SE 1.500	T .337 t .200	4 x 1-1/2
4 x 2	4.500	2.375	4	LE 4.334 SE 2.225	T .083 t .065	LE 4.260 SE 2.157	T .120 t .109	LE 4.026 SE 2.067	T .237 t .154	LE 3.826 SE 1.939	T .337 t .218	4 x 2
4 x 2-1/2	4.500	2.875	4	LE 4.334 SE 2.709	T .083 t .083	LE 4.260 SE 2.635	T .120 t .120	LE 4.026 SE 2.469	T .237 t .203	LE 3.826 SE 2.323	T .337 t .276	4 x 2-1/2
4 x 3	4.500	3.500	4	LE 4.334 SE 3.334	T .083 t .083	LE 4.260 SE 3.260	T .120 t .120	LE 4.026 SE 3.068	T .237 t .216	LE 3.826 SE 2.900	T .337 t .300	4 x 3
4 x 3-1/2	4.500	4.000	4	LE 4.334 SE 3.834	T .083 t .083	LE 4.260 SE 3.760	T .120 t .120	LE 4.026 SE 3.548	T .237 t .226	LE 3.826 SE 3.364	T .337 t .318	4 x 3-1/2
5 x 2	5.563	2.375	5	LE 5.345 SE 2.245	T .109 t .065	LE 5.295 SE 2.157	T .134 t .109	LE 5.047 SE 2.067	T .258 t .154	LE 4.813 SE 1.939	T .375 t .218	5 x 2
5 x 2-1/2	5.563	2.875	5	LE 5.345 SE 2.709	T .109 t .083	LE 5.295 SE 2.635	T .134 t .120	LE 5.047 SE 2.469	T .258 t .203	LE 4.813 SE 2.323	T .375 t .276	5 x 2-1/2
5 x 3	5.563	3.500	5	LE 5.345 SE 3.334	T .109 t .083	LE 5.295 SE 3.260	T .134 t .120	LE 5.047 SE 3.068	T .258 t .216	LE 4.813 SE 2.900	T .375 t .300	5 x 3
5 x 3-1/2	5.563	4.000	5	LE 5.345 SE 3.834	T .109 t .083	LE 5.295 SE 3.760	T .134 t .120	LE 5.047 SE 3.548	T .258 t .226	LE 4.813 SE 3.364	T .375 t .318	5 x 3-1/2
5 x 4	5.563	4.500	5	LE 5.345 SE 4.334	T .109 t .083	LE 5.295 SE 4.260	T .134 t .120	LE 5.047 SE 4.026	T .258 t .237	LE 4.813 SE 3.826	T .375 t .337	5 x 4
6 x 2-1/2	6.625	2.875	5-1/2	LE 6.407 SE 2.709	T .109 t .083	LE 6.357 SE 2.635	T .134 t .120	LE 6.065 SE 2.469	T .280 t .203	LE 5.761 SE 2.323	T .432 t .276	6 x 2-1/2
6 x 3	6.625	3.500	5-1/2	LE 6.407 SE 3.334	T .109 t .083	LE 6.357 SE 3.260	T .134 t .120	LE 6.065 SE 3.068	T .280 t .216	LE 5.761 SE 2.900	T .432 t .300	6 x 3
6 x 3-1/2	6.625	4.000	5-1/2	LE 6.407 SE 3.834	T .109 t .083	LE 6.357 SE 3.760	T .134 t .120	LE 6.065 SE 3.548	T .280 t .226	LE 5.761 SE 3.364	T .432 t .318	6 x 3-1/2
6 x 4	6.625	4.500	5-1/2	LE 6.407 SE 4.334	T .109 t .083	LE 6.357 SE 4.260	T .134 t .120	LE 6.065 SE 4.026	T .280 t .237	LE 5.761 SE 3.826	T .432 t .337	6 x 4
6 x 5	6.625	5.563	5-1/2	LE 6.407 SE 5.345	T .109 t .083	LE 6.357 SE 5.295	T .134 t .134	LE 6.065 SE 5.047	T .280 t .258	LE 5.761 SE 4.813	T .432 t .375	6 x 5
8 x 3-1/2	8.625	4.000	6	LE 8.407 SE 3.834	T .109 t .083	LE 8.329 SE 3.760	T .148 t .120	LE 7.981 SE 3.548	T .322 t .226	LE 7.625 SE 3.364	T .500 t .318	8 x 3-1/2
8 x 4	8.625	4.500	6	LE 8.407 SE 4.334	T .109 t .083	LE 8.329 SE 4.260	T .148 t .120	LE 7.981 SE 4.026	T .322 t .237	LE 7.625 SE 3.826	T .500 t .337	8 x 4
8 x 5	8.625	5.563	6	LE 8.407 SE 5.345	T .109 t .109	LE 8.329 SE 5.295	T .148 t .134	LE 7.981 SE 5.047	T .322 t .258	LE 7.625 SE 4.813	T .500 t .375	8 x 5
8 x 6	8.625	6.625	6	LE 8.407 SE 6.407	T .109 t .109	LE 8.329 SE 6.357	T .148 t .134	LE 7.981 SE 6.065	T .322 t .280	LE 7.625 SE 5.761	T .500 t .432	8 x 6
10 x 4	10.750	4.500	7	LE 10.482 SE 4.334	T .134 t .083	LE 10.420 SE 4.260	T .165 t .120	LE 10.020 SE 4.026	T .365 t .237	LE 9.750 SE 3.826	T .500 t .337	10 x 4
10 x 5	10.750	5.563	7	LE 10.482 SE 5.345	T .134 t .109	LE 10.420 SE 5.295	T .165 t .134	LE 10.020 SE 5.047	T .365 t .258	LE 9.750 SE 4.813	T .500 t .375	10 x 5
10 x 6	10.750	6.625	7	LE 10.482 SE 6.407	T .134 t .109	LE 10.420 SE 6.357	T .165 t .134	LE 10.020 SE 6.065	T .365 t .280	LE 9.750 SE 5.761	T .500 t .432	10 x 6
10 x 8	10.750	8.625	7	LE 10.482 SE 8.407	T .134 t .109	LE 10.420 SE 8.329	T .165 t .148	LE 10.020 SE 7.981	T .365 t .322	LE 9.750 SE 7.625	T .500 t .500	10 x 8
12 x 5	12.750	5.563	8	LE 12.438 SE 5.345	T .156 t .109	LE 12.390 SE 5.295	T .180 t .134	LE 12.000 SE 5.047	T .375 t .258	LE 11.750 SE 4.813	T .500 t .375	12 x 5
12 x 6	12.750	6.625	8	LE 12.438 SE 6.407	T .156 t .109	LE 12.390 SE 6.357	T .180 t .134	LE 12.000 SE 6.065	T .375 t .280	LE 11.750 SE 5.761	T .500 t .432	12 x 6
12 x 8	12.750	8.625	8	LE 12.438 SE 8.407	T .156 t .109	LE 12.390 SE 8.329	T .180 t .148	LE 12.000 SE 7.981	T .375 t .322	LE 11.750 SE 7.625	T .500 t .500	12 x 8
12 x 10	12.750	10.750	8	LE 12.438 SE 10.482	T .156 t .134	LE 12.390 SE 10.420	T .180 t .165	LE 12.000 SE 6.065	T .375 t .365	LE 11.750 SE 9.750	T .500 t .500	12 x 10

ECCENTRIC REDUCERS

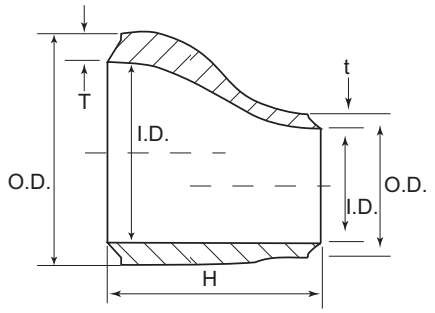

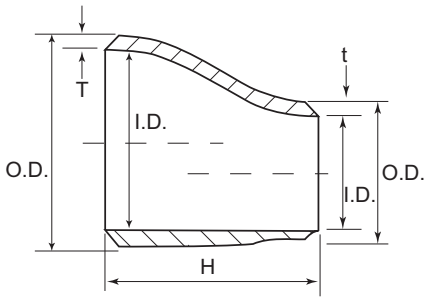

NOM. PIPE SIZE	OUTSIDE DIAMETER LARGE END (O.D.)	OUTSIDE DIAMETER SMALL END (O.D.)	LENGTH (H)	SCHEDULE 5S INSIDE DIAMETER (I.D.) LARGE END –LE SMALL END–SE	SCHEDULE 5S WALL THICKNESS LARGE END –T SMALL END–t	SCHEDULE 10S INSIDE DIAMETER (I.D.) LARGE END –LE SMALL END–SE	SCHEDULE 10S WALL THICKNESS LARGE END –T SMALL END–t	SCHEDULE 40S INSIDE DIAMETER (I.D.) LARGE END –LE SMALL END–SE	SCHEDULE 40S WALL THICKNESS LARGE END –T SMALL END–t	SCHEDULE 80S INSIDE DIAMETER (I.D.) LARGE END –LE SMALL END–SE	SCHEDULE 80S WALL THICKNESS LARGE END –T SMALL END–t	NOM PIPE SIZE
3/4 x 3/8	1.050	.675	1-1/2	LE .920 SE .545	T .065 t .065	LE .884 SE .545	T .083 t .065	LE .824 SE .493	T .113 t .091	LE .742 SE .423	T .154 t .126	3/4 x 3/8
3/4 x 1/2	1.050	.840	1-1/2	LE .920 SE .710	T .065 t .065	LE .884 SE .674	T .083 t .083	LE .824 SE .622	T .113 t .109	LE .742 SE .546	T .154 t .147	3/4 x 1/2
1 x 3/8	1.315	.675	2	LE 1.185 SE .545	T .065 t .065	LE 1.097 SE .545	T .109 t .065	LE 1.049 SE .493	T .133 t .091	LE .957 SE .423	T .179 t .126	1 x 3/8
1 x 1/2	1.315	.840	2	LE 1.185 SE .710	T .065 t .065	LE 1.097 SE .674	T .109 t .083	LE 1.049 SE .622	T .133 t .109	LE .957 SE .546	T .179 t .147	1 x 1/2
1 x 3/4	1.315	1.050	2	LE 1.185 SE .920	T .065 t .065	LE 1.097 SE .884	T .109 t .083	LE 1.049 SE .824	T .133 t .113	LE .957 SE .742	T .179 t .154	1 x 3/4
1-1/4 x 1/2	1.660	.840	2	LE 1.530 SE .710	T .065 t .065	LE 1.442 SE .674	T .109 t .083	LE 1.380 SE .622	T .140 t .109	LE 1.278 SE .546	T .191 t .147	1-1/4 x 1/2
1-1/4 x 3/4	1.660	1.050	2	LE 1.530 SE .920	T .065 t .065	LE 1.442 SE .884	T .109 t .083	LE 1.380 SE .824	T .140 t .113	LE 1.278 SE .742	T .191 t .154	1-1/4 x 3/4
1-1/4 x 1	1.660	1.315	2	LE 1.530 SE 1.185	T .065 t .065	LE 1.442 SE 1.097	T .109 t .109	LE 1.380 SE 1.049	T .140 t .133	LE 1.278 SE .957	T .191 t .179	1-1/4 x 1
1-1/2 x 1/2	1.900	.840	2-1/2	LE 1.770 SE .710	T .065 t .065	LE 1.682 SE .674	T .109 t .083	LE 1.610 SE .622	T .145 t .109	LE 1.500 SE .546	T .200 t .147	1-1/2 x 1/2
1-1/2 x 3/4	1.900	1.050	2-1/2	LE 1.770 SE .920	T .065 t .065	LE 1.682 SE .884	T .109 t .083	LE 1.610 SE .824	T .145 t .113	LE 1.500 SE .742	T .200 t .154	1-1/2 x 3/4
1-1/2 x 1	1.900	1.315	2-1/2	LE 1.770 SE 1.185	T .065 t .065	LE 1.682 SE 1.097	T .109 t .109	LE 1.610 SE 1.049	T .145 t .133	LE 1.500 SE .957	T .200 t .179	1-1/2 x 1
1-1/2 x 1 /4	1.900	1.660	2-1/2	LE 1.770 SE 1.530	T .065 t .065	LE 1.682 SE 1.442	T .109 t .109	LE 1.610 SE 1.380	T .145 t .140	LE 1.500 SE 1.278	T .200 t .191	1-1/2 x 1 /4
2 x 3/4	2.375	1.050	3	LE 2.245 SE .920	T .065 t .065	LE 2.157 SE .884	T .109 t .083	LE 2.067 SE .824	T .154 t .113	LE 1.939 SE .742	T .218 t .154	2 x 3/4
2 x 1	2.375	1.315	3	LE 2.245 SE 1.185	T .065 t .065	LE 2.157 SE 1.097	T .109 t .109	LE 2.067 SE 1.049	T .154 t .133	LE 1.939 SE .957	T .218 t .179	2 x 1
2 x 1-1/4	2.375	1.660	3	LE 2.245 SE 1.530	T .065 t .065	LE 2.157 SE 1.442	T .109 t .109	LE 2.067 SE 1.380	T .154 t .140	LE 1.939 SE 1.278	T .218 t .191	2 x 1-1/4
2 x 1-1/2	2.375	1.900	3	LE 2.245 SE 1.770	T .065 t .065	LE 2.157 SE 1.682	T .109 t .109	LE 2.067 SE 1.610	T .154 t .145	LE 1.939 SE 1.500	T .218 t .200	2 x 1-1/2
2-1/2 x 1	2.875	1.315	3-1/2	LE 2.709 SE 1.185	T .083 t .065	LE 2.635 SE 1.097	T .120 t .109	LE 2.469 SE 1.049	T .203 t .133	LE 2.323 SE .957	T .276 t .179	2-1/2 x 1
2-1/2 x 1-1/4	2.875	1.660	3-1/2	LE 2.709 SE 1.530	T .083 t .065	LE 2.635 SE 1.442	T .120 t .109	LE 2.469 SE 1.380	T .203 t .140	LE 2.323 SE 1.278	T .276 t .191	2-1/2 x 1-1/4
2-1/2 x 1-1/2	2.875	1.900	3-1/2	LE 2.709 SE 1.770	T .083 t .065	LE 2.635 SE 1.682	T .120 t .109	LE 2.469 SE 1.610	T .203 t .145	LE 2.323 SE 1.500	T .276 t .200	2-1/2 x 1-1/2
2-1/2 x 2	2.875	2.375	3-1/2	LE 2.709 SE 2.245	T .083 t .065	LE 2.635 SE 2.157	T .120 t .109	LE 2.469 SE 2.067	T .203 t .154	LE 2.323 SE 1.939	T .276 t .218	2-1/2 x 2
3 x 1	3.500	1.315	3-1/2	LE 3.334 SE 1.185	T .083 t .065	LE 3.260 SE 1.097	T .120 t .109	LE 3.068 SE 1.049	T .216 t .133	LE 2.900 SE .957	T .300 t .179	3 x 1
3 x 1-1/4	3.500	1.660	3-1/2	LE 3.334 SE 1.530	T .083 t .065	LE 3.260 SE 1.442	T .120 t .109	LE 3.068 SE 1.380	T .216 t .140	LE 2.900 SE 1.278	T .300 t .191	3 x 1-1/4
3 x 1-1/2	3.500	1.900	3-1/2	LE 3.334 SE 1.770	T .083 t .065	LE 3.260 SE 1.682	T .120 t .109	LE 3.068 SE 1.610	T .216 t .145	LE 2.900 SE 1.500	T .300 t .200	3 x 1-1/2
3 x 2	3.500	2.375	3-1/2	LE 3.334 SE 2.245	T .083 t .065	LE 3.260 SE 2.157	T .120 t .109	LE 3.068 SE 2.067	T .216 t .154	LE 2.900 SE 1.939	T .300 t .218	3 x 2
3 x 2-1/2	3.500	2.875	3-1/2	LE 3.334 SE 2.709	T .083 t .083	LE 3.260 SE 2.635	T .120 t .120	LE 3.068 SE 2.469	T .216 t .203	LE 2.900 SE 2.323	T .300 t .276	3 x 2-1/2
3-1/2 x 1-1/4	4.000	1.660	4	LE 3.834 SE 1.530	T .083 t .065	LE 3.760 SE 1.442	T .120 t .109	LE 3.548 SE 1.380	T .226 t .140	LE 3.364 SE 1.278	T .318 t .191	3-1/2 x 1-1/4
3-1/2 x 1-1/2	4.000	1.900	4	LE 3.834 SE 1.770	T .083 t .065	LE 3.760 SE 1.682	T .120 t .109	LE 3.548 SE 1.610	T .226 t .145	LE 3.364 SE 1.500	T .318 t .200	3-1/2 x 1-1/2

ECCENTRIC REDUCERS (CONT.)

NOM. PIPE SIZE	OUTSIDE DIAMETER LARGE END (O.D.)	OUTSIDE DIAMETER SMALL END (O.D.)	LENGTH (H)	SCHEDULE 5S INSIDE DIAMETER (I.D.) LARGE END –LE SMALL END–SE	SCHEDULE 5S WALL THICKNESS LARGE END –T SMALL END–t	SCHEDULE 10S INSIDE DIAMETER (I.D.) LARGE END –LE SMALL END–SE	SCHEDULE 10S WALL THICKNESS LARGE END –T SMALL END–t	SCHEDULE 40S INSIDE DIAMETER (I.D.) LARGE END –LE SMALL END–SE	SCHEDULE 40S WALL THICKNESS LARGE END –T SMALL END–t	SCHEDULE 80S INSIDE DIAMETER (I.D.) LARGE END –LE SMALL END–SE	SCHEDULE 80S WALL THICKNESS LARGE END –T SMALL END–t	NOM PIPE SIZE
3-1/2 x 2	4.000	2.375	4	LE 3.834 SE 2.245	T .083 t .065	LE 3.760 SE 2.157	T .120 t .109	LE 3.548 SE 2.067	T .226 t .154	LE 3.364 SE 1.939	T .318 t .218	3-1/2 x 2
3-1/2 x 2-1/2	4.000	2.875	4	LE 3.834 SE 2.709	T .083 t .083	LE 3.760 SE 2.635	T .120 t .120	LE 3.548 SE 2.469	T .226 t .203	LE 3.364 SE 2.323	T .318 t .276	3-1/2 x 2-1/2
3-1/2 x 3	4.000	3.500	4	LE 3.834 SE 3.334	T .083 t .083	LE 3.760 SE 3.260	T .120 t .120	LE 3.548 SE 3.068	T .226 t .216	LE 3.364 SE 2.900	T .318 t .300	3-1/2 x 3
4 x 1-1/2	4.500	1.900	4	LE 4.334 SE 1.770	T .083 t .065	LE 4.260 SE 1.682	T .120 t .109	LE 4.026 SE 1.610	T .237 t .145	LE 3.826 SE 1.500	T .337 t .200	4 x 1-1/2
4 x 2	4.500	2.375	4	LE 4.334 SE 2.225	T .083 t .065	LE 4.260 SE 2.157	T .120 t .109	LE 4.026 SE 2.067	T .237 t .154	LE 3.826 SE 1.939	T .337 t .218	4 x 2
4 x 2-1/2	4.500	2.875	4	LE 4.334 SE 2.709	T .083 t .083	LE 4.260 SE 2.635	T .120 t .120	LE 4.026 SE 2.469	T .237 t .203	LE 3.826 SE 2.323	T .337 t .276	4 x 2-1/2
4 x 3	4.500	3.500	4	LE 4.334 SE 3.334	T .083 t .083	LE 4.260 SE 3.260	T .120 t .120	LE 4.026 SE 3.068	T .237 t .216	LE 3.826 SE 2.900	T .337 t .300	4 x 3
4 x 3-1/2	4.500	4.000	4	LE 4.334 SE 3.834	T .083 t .083	LE 4.260 SE 3.760	T .120 t .120	LE 4.026 SE 3.548	T .237 t .226	LE 3.826 SE 3.364	T .337 t .318	4 x 3-1/2
5 x 2	5.563	2.375	5	LE 5.345 SE 2.245	T .109 t .065	LE 5.295 SE 2.157	T .134 t .109	LE 5.047 SE 2.067	T .258 t .154	LE 4.813 SE 1.939	T .375 t .218	5 x 2
5 x 2-1/2	5.563	2.875	5	LE 5.345 SE 2.709	T .109 t .083	LE 5.295 SE 2.635	T .134 t .120	LE 5.047 SE 2.469	T .258 t .203	LE 4.813 SE 2.323	T .375 t .276	5 x 2-1/2
5 x 3	5.563	3.500	5	LE 5.345 SE 3.334	T .109 t .083	LE 5.295 SE 3.260	T .134 t .120	LE 5.047 SE 3.068	T .258 t .216	LE 4.813 SE 2.900	T .375 t .300	5 x 3
5 x 3-1/2	5.563	4.000	5	LE 5.345 SE 3.834	T .109 t .083	LE 5.295 SE 3.760	T .134 t .120	LE 5.047 SE 3.548	T .258 t .226	LE 4.813 SE 3.364	T .375 t .318	5 x 3-1/2
5 x 4	5.563	4.500	5	LE 5.345 SE 4.334	T .109 t .083	LE 5.295 SE 4.260	T .134 t .120	LE 5.047 SE 4.026	T .258 t .237	LE 4.813 SE 3.826	T .375 t .337	5 x 4
6 x 2-1/2	6.625	2.875	5-1/2	LE 6.407 SE 2.709	T .109 t .083	LE 6.357 SE 2.635	T .134 t .120	LE 6.065 SE 2.469	T .280 t .203	LE 5.761 SE 2.323	T .432 t .276	6 x 2-1/2
6 x 3	6.625	3.500	5-1/2	LE 6.407 SE 3.334	T .109 t .083	LE 6.357 SE 3.260	T .134 t .120	LE 6.065 SE 3.068	T .280 t .216	LE 5.761 SE 2.900	T .432 t .300	6 x 3
6 x 3-1/2	6.625	4.000	5 1/2	LE 6.407 SE 3.834	T .109 t .083	LE 6.357 SE 3.760	T .134 t .120	LE 6.065 SE 3.548	T .280 t .226	LE 5.761 SE 3.364	T .432 t .318	6 x 3-1/2
6 x 4	6.625	4.500	5 1/2	LE 6.407 SE 4.334	T .109 t .083	LE 6.357 SE 4.260	T .134 t .120	LE 6.065 SE 4.026	T .280 t .237	LE 5.761 SE 3.826	T .432 t .337	6 x 4
6 x 5	6.625	5.563	5 1/2	LE 6.407 SE 5.345	T .109 t .083	LE 6.357 SE 5.295	T .134 t .134	LE 6.065 SE 5.047	T .280 t .258	LE 5.761 SE 4.813	T .432 t .375	6 x 5
8 x 3-1/2	8.625	4.000	6	LE 8.407 SE 3.834	T .109 t .083	LE 8.329 SE 3.760	T .148 t .120	LE 7.981 SE 3.548	T .322 t .226	LE 7.625 SE 3.364	T .500 t .318	8 x 3-1/2
8 x 4	8.625	4.500	6	LE 8.407 SE 4.334	T .109 t .083	LE 8.329 SE 4.260	T .148 t .120	LE 7.981 SE 4.026	T .322 t .237	LE 7.625 SE 3.826	T .500 t .337	8 x 4
8 x 5	8.625	5.563	6	LE 8.407 SE 5.345	T .109 t .109	LE 8.329 SE 5.295	T .148 t .134	LE 7.981 SE 5.047	T .322 t .258	LE 7.625 SE 4.813	T .500 t .375	8 x 5
8 x 6	8.625	6.625	6	LE 8.407 SE 6.407	T .109 t .109	LE 8.329 SE 6.357	T .148 t .134	LE 7.981 SE 6.065	T .322 t .280	LE 7.625 SE 5.761	T .500 t .432	8 x 6
10 x 4	10.750	4.500	7	LE 10.482 SE 4.334	T .134 t .083	LE 10.420 SE 4.260	T .165 t .120	LE 10.020 SE 4.026	T .365 t .237	LE 9.750 SE 3.826	T .500 t .337	10 x 4
10 x 5	10.750	5.563	7	LE 10.482 SE 5.345	T .134 t .109	LE 10.420 SE 5.295	T .165 t .134	LE 10.020 SE 5.047	T .365 t .258	LE 9.750 SE 4.813	T .500 t .375	10 x 5
10 x 6	10.750	6.625	7	LE 10.482 SE 6.407	T .134 t .109	LE 10.420 SE 6.357	T .165 t .134	LE 10.020 SE 6.065	T .365 t .280	LE 9.750 SE 5.761	T .500 t .432	10 x 6
10 x 8	10.750	8.625	7	LE 10.482 SE 8.407	T .134 t .109	LE 10.420 SE 8.329	T .165 t .148	LE 10.020 SE 7.981	T .365 t .322	LE 9.750 SE 7.625	T .500 t .500	10 x 8
12 x 5	12.750	5.563	8	LE 12.438 SE 5.345	T .156 t .109	LE 12.390 SE 5.295	T .180 t .134	LE 12.000 SE 5.047	T .375 t .258	LE 11.750 SE 4.813	T .500 t .375	12 x 5
12 x 6	12.750	6.625	8	LE 12.438 SE 6.407	T .156 t .109	LE 12.390 SE 6.357	T .180 t .134	LE 12.000 SE 6.065	T .375 t .280	LE 11.750 SE 5.761	T .500 t .432	12 x 6
12 x 8	12.750	8.625	8	LE 12.438 SE 8.407	T .156 t .109	LE 12.390 SE 8.329	T .180 t .148	LE 12.000 SE 7.981	T .375 t .322	LE 11.750 SE 7.625	T .500 t .500	12 x 8
12 x 10	12.750	10.750	8	LE 12.438 SE 10.482	T .156 t .134	LE 12.390 SE 10.420	T .180 t .165	LE 12.000 SE 6.065	T .375 t .365	LE 11.750 SE 9.750	T .500 t .500	12 x 10

WELD FITTING WEIGHTS

									STUB ENDS	
PIPE SIZE	LONG RADIUS 90º ELBOWS	LONG RADIUS 45º ELBOWS	LONG RADIUS 180º BENDS	SHORT RADIUS 90º ELBOWS	STRAIGHT TEES	STRAIGHT CROSSES	45º LATERALS	CAPS	MSS SHORT LENGTH	TYPE C SHORT LENGTH
STAINLESS STEEL – SCHEDULE 5S										
1/2	.12	.06	.21	–	.19	.25	–	.08	.14	.07
3/4	.13	.06	.30	–	.22	.29	–	.11	.18	.13
1	.19	.12	.53	.17	.40	.50	.85	.18	.25	.16
1-1/4	.31	.19	1	.31	.75	.93	1.16	.20	.39	.19
1-1/2	.38	.25	1.28	.43	.95	1.18	1.48	.22	.41	.25
2	.64	.31	2.1	.63	1.20	1.49	2.22	.36	.71	.38
2-1/2	1.50	.75	3.58	1.25	2.15	2.66	3.97	.50	.95	.70
3	2.00	1.06	5.3	1.75	3.40	4.21	5.10	.86	1.23	.88
3-1/2	2.62	1.16	6.55	2.35	5.50	6.82	6.60	1.20	1.63	–
4	3.31	1.66	12.00	3.12	7.20	8.92	7.59	1.25	1.90	1.38
5	6.50	3.25	13.00	4.94	13.00	16.12	13.77	2.00	2.80	2.06
6	10.00	5.00	20.00	7.75	17.20	21.32	17.14	2.75	3.88	2.75
8	17.30	8.65	35.00	15.44	31.00	38.44	25.68	4.50	5.90	3.88
10	32.00	16.00	64.00	27.40	55.00	68.20	44.98	9.50	8.90	7.48
12	51.00	25.50	102.00	35.00	83.00	102.00	77.71	14.00	15.30	15.00
STAINLESS STEEL – SCHEDULE 10S										
1/2	.14	.07	.26	–	.21	.28	–	.09	.16	.11
3/4	.15	.07	.41	–	.28	.37	–	.12	.21	.15
1	.30	.19	.75	.23	.63	.72	1.38	.19	.35	.23
1-1/4	.50	.25	1.26	.38	1.10	1.26	1.87	.28	.49	.33
1-1/2	.69	.38	1.75	.49	1.50	1.72	2.43	.31	.56	.48
2	1.13	.56	3.13	.81	1.87	2.15	3.66	.38	.94	.80
2-1/2	1.88	1.06	5.88	1.36	3.10	3.56	5.66	.56	1.25	.96
3	2.69	1.38	9.81	2.17	3.90	4.48	7.29	.88	1.60	1.20
3-1/2	3.75	1.66	10.50	3.05	5.88	6.76	9.45	1.25	1.90	–
4	4.75	2.38	13.60	3.79	7.63	8.77	10.91	1.44	2.40	2.00
5	8.00	4.00	16.00	6.12	13.45	15.46	16.83	2.25	3.25	2.63
6	12.00	6.00	24.00	9.15	17.80	20.47	20.91	3.00	4.75	3.25
8	23.50	11.75	47.00	17.63	34.50	39.67	34.69	5.50	7.10	6.19
10	43.00	21.50	86.00	35.00	59.00	67.85	55.17	10.80	11.30	9.46
12	60.00	30.00	120.00	40.00	87.00	100.00	84.67	14.40	18.00	16.07